TRUCKRUN

RW06 Technical Specification Sheet

Parameter	Voltage (V)	36/48	Image
	Rated Power (W)	350/500	
	Max Rotation speed (rpm)	360	
	Max torque (N.m)	55	
	Rated Efficiency (%)	>80%	
	Magnet Poles	20	
	Reduction Ratio	5:1	
	Weight(Kg)	3.4	
	Installation Width(mm/OLD)	135	
	Max Outer diameter (mm)	Φ158.8	
	Cable route	Through shaft, Right	
	Spoke size	12G/13G	
	Pinout Type	Optional	
	Hall Sensor	Optional	
	Freewheel Type	Thread-on Freewheel	
	Integrated Speed sensor	Optional	
	Connector	Optional	
	Noise Grade(dB)	< 55	
	Salt-Fog Spray Test Standard(h)	48	
	IP Level	IP65	
	Certifications	CE、ROHS	

Advantage

1. Long service life (bearing life), long maintenance cycle; simple and convenient maintenance;
2. There is no mechanical commutator inside to prevent dust from entering the inside of the motor, with high reliability;
3. The overload capacity is strong, which can meet the needs of the protruding locked rotor of the vehicle, and the motor rotor has a high permanent magnetic field;
4. Superior starting performance, no hysteresis damping to consume kinetic energy, and strong climbing ability with large torque;
5. High work efficiency, low power consumption and long continuation mileage;
6. Superior waterproof performance;
7. There are many driving modes, which can meet most of the loading requirements of the market;
8. The motor has a high performance-price ratio;
9. Low noise and reliable operation.

Outer size

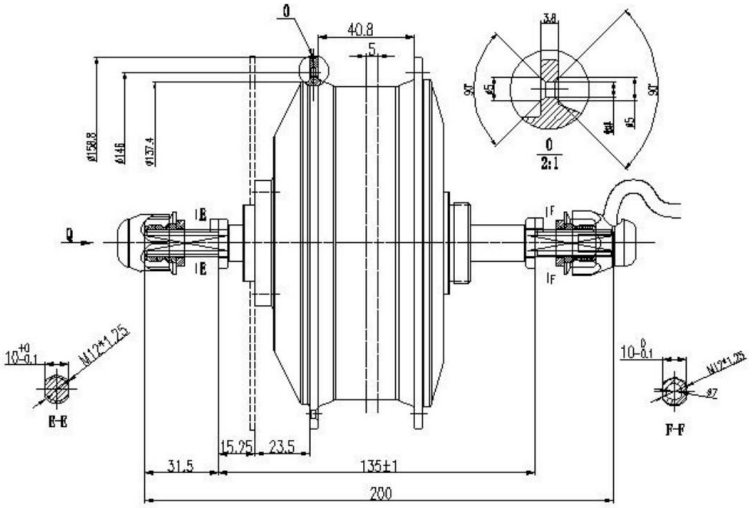

Audit：　　Check：